NOTES:
1. MATERIAL:
   1.1 HOUSING: HALOGEN FREE PLASTIC, HIGH TEMP., UL94V-0.
   1.2 CONTACT: COPPER ALLOY
2. FINISH:
   1. GOLD FLASH PLATING(1~3u"),UNDER NICKEL PLATED.
   N: 100~200u" Matt Tin PLATING,UNDER NICKEL PLATED.(Lead Free)
   L: 100~200u" Tin PLATING,UNDER NICKEL PLATED.
3. REFLOW SOLDER CAPABLE TO 260°C PER ACES SPEC.
4. SPEC. PLS. REFER TO PS-50289-xxxxx-xxx
5. PACKAGE PLS. REFER TO 50413-XXXX-TRP
6. PART NUMBER

50413-XXX X X-XXX

No Of Contact

Packing
0:Tape & Reel
1:Tube

Plating
L:Lead Free (Pure Tin)
N:Matt Tin
1:Gold Flash over all

XXX	Color	DIM E
001	Black	6.0
002	Black	5.0

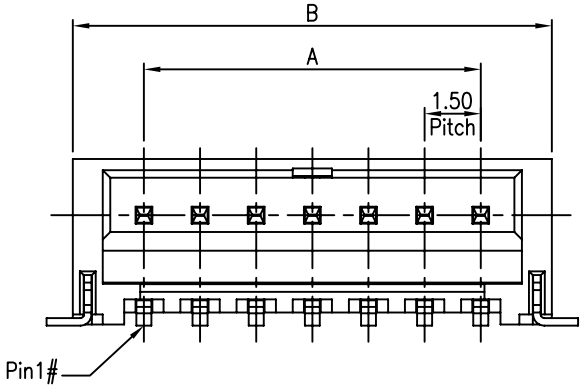

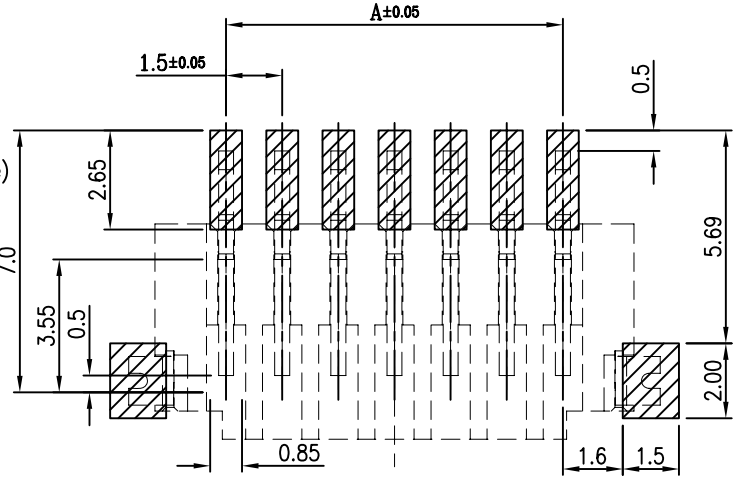

RECOMMEND PCB LAYOUT

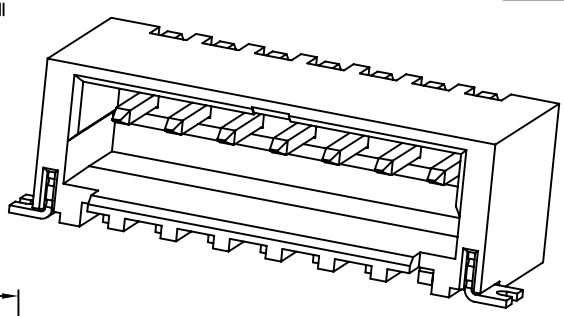

CKT	Dim A	Dim B	Dim C	Dim D
2	1.5	5.3	1.7	6.7
3	3.0	6.8	3.2	8.2
4	4.5	8.3	4.7	9.7
5	6.0	9.8	6.2	11.2
6	7.5	11.3	7.7	12.7
7	9.0	12.8	9.2	14.2
8	10.5	14.3	10.7	15.7
9	12.0	15.8	12.2	17.2
10	13.5	17.3	13.7	18.7
11	15.0	18.8	15.2	20.2
12	16.5	20.3	16.7	21.7
13	18.0	21.8	18.2	23.2
14	19.5	23.3	19.7	24.7
15	21.0	24.8	21.2	26.2
16	22.5	26.3	22.7	27.7
17	24.0	27.8	24.2	29.2
18	25.5	29.3	25.7	30.7
19	27.0	30.8	27.2	32.2
20	28.5	32.3	28.7	33.7

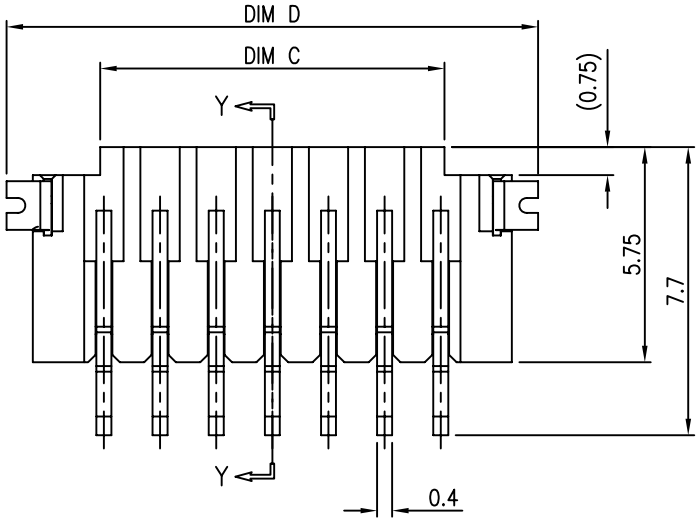

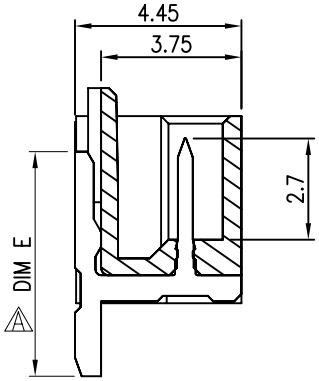

SEC. Y-Y

一般公差 TOLERANCES X. ±0.5 .XX ±0.15 .X ±0.25 .XXX ±0.1 ANGLES ±2°	宏致電子股份有限公司 Aces Electronic Co.,Ltd.		
檢驗尺寸標示 SYMBOLS CR MA INDICATE CLASSIFICATION DIMENSION CR MARK IS CRITICAL DIM. MA MARK IS MAJOR DIM.	品名 (TITLE) 1.5mm W-T-B Header SMT R/A Type 圖號 (DWG.NO) 50413-XXXXX-XXX	製圖 (DR) '09/10/21 liuwei 審核 (CHKD) Sam 核准 (APPD) Jason	
表面處理 (FINISH)	比例 (SCALE) 5:1 / 單位 (UNITS) mm	張數 (SHEET) 1 OF 1	SIZE A4 / REV A